HAND OUT 01: NC PROGRAMMING NOTES

The following NC codes are commonly found in CNC programs for machining:

G Words

G00	Rapid traverse
G01	Linear interpolation
G02	Circular interpolation, CW
G03	Circular interpolation, CCW
G04	Dwell (non-modal)
G05	Hold until operator restarts
G06	Parabolic interpolation
G07	unassigned EIA - reserved
G08	Acceleration (non-modal)
G09	Deceleration (non-modal)
G10-12	unassigned EIA
G13-16	Axis selection
G17	X-Y Plane
G18	X-Z Plane
G19	Y-Z Plane
G20-24	unassigned EIA
G25-29	unassigned – available for individual use
G30-32	unassigned EIA
G33	Thread cutting, constant lead
G34	Thread cutting, increasing lead
G35	Thread cutting, decreasing lead
G36-39	unassigned – available for individual use
G40	Cutter compensation, cancel
G41	Cutter compensation, left
G42	Cutter compensation, right
G43	Cutter compensation, inside corner
G44	Cutter compensation, outside corner
G45-49	unassigned EIA
G50	Reserved for adaptive control (non-modal)
G51	Cutter compensation, +/0 (non-modal)
G52	Cutter compensation, –/0 (non-modal)
G53	Linear shift, cancel
G54	Linear shift, X
G55	Linear shift, Y
G56	Linear shift, Z
G57	Linear shift, XY
G58	Linear shift, XZ
G59	Linear shift, YZ
G60-69	unassigned EIA
G70	Inch format
G71	Metric format
G72	Circular interpolation, CW (3-D)
G73	Circular interpolation, CCW (3-D)
G74	Multi-quadrant circle interpolation, off
G75	Multi-quadrant circle interpolation, on
G76-79	unassigned EIA
G80	Fixed-cycle, off
G81-89	Fixed cycles (manufacturer dependent)
G90	Absolute positioning
G91	Incremental positioning
G92	Set origin of coordinate system (non-modal)
G93	Inverse time feed rate (V/D)
G94	Inches (mm) per minute feed rate
G95	Inches (mm) per revolution feed rate
G96	Constant surface speed feet (m) per minute
G97	Revolutions per minute
G98-99	unassigned EIA

Circular interpolation occurs within a plane, and is specified by a block containing the following (in order):

1. Plane code (G word)
2. Direction code (G word)
3. 1st destination coordinate (X or Y word)
4. 2nd destination coordinate (Y or Z word)
5. 1st incremental coordinate for arc center, from initial tool position (I or J word)
6. 2nd incremental coordinate for arc center, from initial tool position (J or K word)
7. Feed word (if necessary)

X, Y, Z (A, B, C) Words

These words provide coordinates for the axes of motion. A, B, and C specify rotation about the X, Y, and Z axes, respectively.

I, J, K Words

These specify the coordinates for the arc/circle center, always incrementally from the initial tool position (for circular interpolation).

F Words

Specify the feed rate or thread lead.

S Words
Specify the spindle speed.

R* Words
These are words used to specify the radius of an arc/circle (for circular interpolation) (*highly machine dependent).

T Words
Specify the tool number (turret position) to use. If more than two digits, are used, the second two digits are the offset number.

M Words

M00	Program stop (non-modal) (command starts after current block)
M01	Optional stop (non-modal) (command starts after current block)
M02	End of program (non-modal) (command starts after current block)
M03	Start spindle, CW
M04	Start spindle, CCW
M05	Stop spindle (command starts after current block)
M06	Change tool
M07	Coolant 1 on
M08	Coolant 2 on
M09	Coolant off (command starts after current block)
M10	Clamp
M11	Unclamp
M12	Synchronization code (command starts after current block)
M13	Start spindle, CW and coolant on
M14	Start spindle, CCW and coolant on
M15	Motion in positive direction (non-modal)
M16	Motion in negative direction (non-modal)
M17-18	unassigned EIA
M19	Oriented spindle stop
M20-29	unassigned EIA – available for individual use
M30	End of tape/data, rewind (command starts after current block)
M31	Interlock bypass
M32-35	unassigned EIA
M36-39	unassigned EIA – available for individual use
M40-46	unassigned EIA – machine dependent
M47	Return to program start (non-modal)
M48	Cancel M49
M49	Feed/speed bypass override
M50-57	unassigned EIA
M58	Cancel M59
M59	Bypass constant surface speed updating
M60-89	unassigned EIA
M90-99	Reserved for user

The usual steps in generating NC code files are:

1. A part model is created using a CAD system.
2. The CAD part model is transferred to a CAM system (unless integrated with the CAD program).
3. The geometry of the work piece stock is specified.
4. The paths, tools, feeds, speeds, and depth of cuts for each machining pass are specified.
5. The CAM software generates a CL (cutter location) data file (often APT-like).
6. A post-processor reads the CL data file, and generates the NC code specific to the machine tool controller.

The NC code is transferred (often by RS-232 link) to the machine tool controller, where the operator initiates production of the part on the machine tool. With the spread of more capable CAD/CAM packages, it has become uncommon for the engineer to do much manual NC programming. However, editing NC code is a common task.

Example NC Problem

The following workpiece is to have a finishing pass around its periphery (see Figure 1). The pertinent machining data is: (a) cutter diameter is 0.25 inches; (b) feed rate is 6 inches per minute; (c) cutting speed is 300 surface feet per minute; (d) the tool home position is at (2, 2, 8); and (e) the part home position is at (4, 4, 0), referencing the ***lower****, left corner of the top of the workpiece. (Adapted from Chang, T. C., Wysk, R. A., & Wang, H. P. (1991). *Computer-Aided Manufacturing*. Englewood Cliffs, NJ: Prentice-Hall. pp. 253-255.)

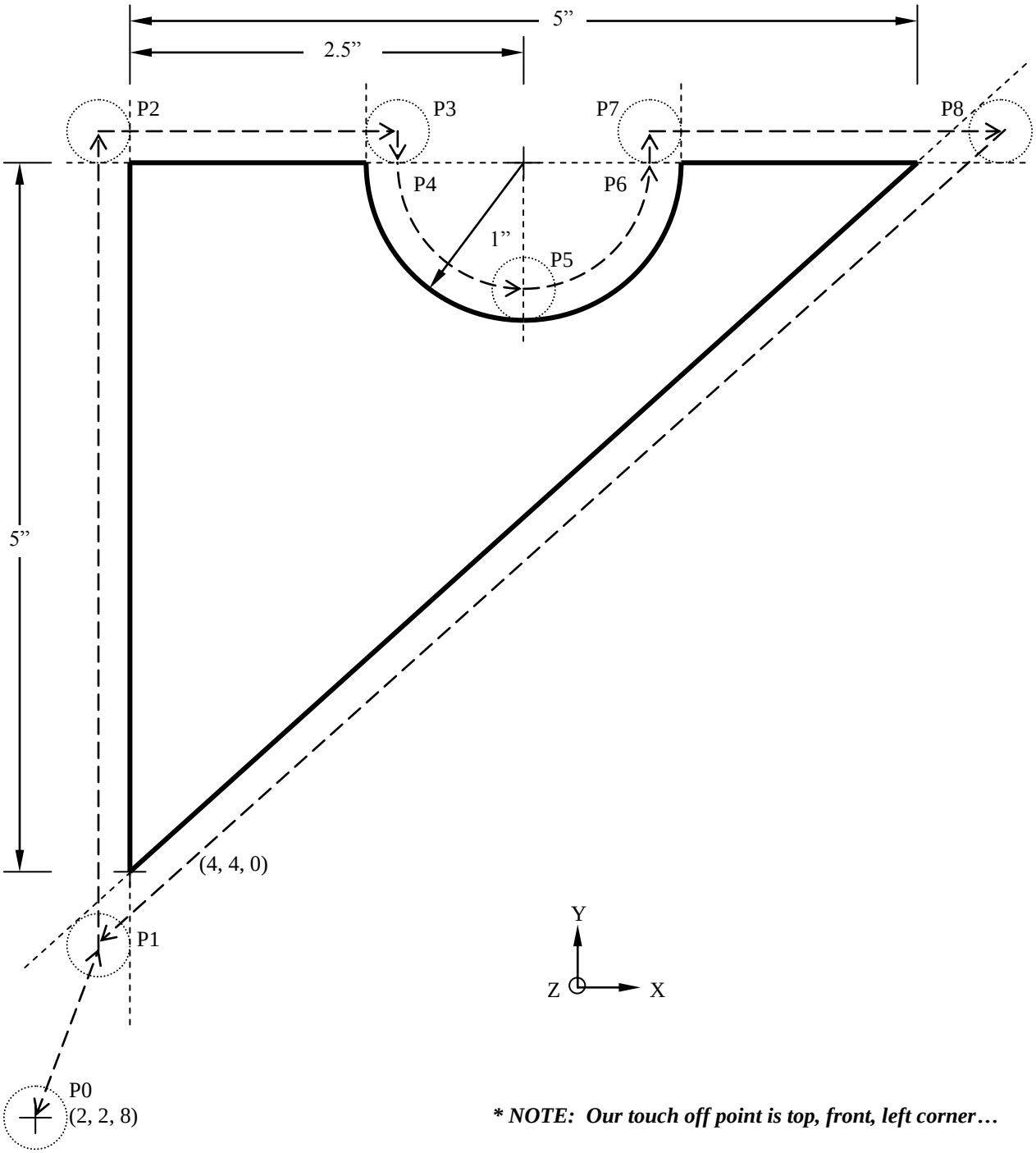

**** NOTE: Our touch off point is top, front, left corner…***

Figure 1. Workpiece for NC machining.

Geometry Calculations

P1: x = 4 – ½ (0.25) = 3.8750
y = 4 – ½ (0.25) tan 67.5° = 3.6982

P2: x = $P1_x$ = 3.8750
y = 4 + 5 + ½ (0.25) = 9.1250

P3: x = 4 + 2.5 – 1 + ½ (0.25) = 5.6250
y = $P2_y$ = 9.1250

P4: x = $P3_x$ = 5.6250
y = 9.125 – ½ (0.25) = 9.0000

P5: x = 4 + 2.5 = 6.5000 i = 4 + 2.5 – $P4_x$ = 0.8750 *offset to circle center*
y = 9.125 – 1 + ½ (0.25) = 8.1250 j = 4 + 5 – $P4_y$ = 0.0000 *offset to circle center*

P6: x = 4 + 2.5 + 1 – ½ (0.25) = 7.3750 i = 4 + 2.5 – $P5_x$ = 0.0000 *offset to circle center*
y = $P4_y$ = 9.0000 j = 4 + 5 – $P5_y$ = 0.8750 *offset to circle center*

P7: x = $P6_x$ = 7.3750
y = $P3_y$ = 9.1250

P8: x = 4 + 5 + ½ (0.25) tan 67.5° = 9.3018
y = $P7_y$ = 9.1250

Table of Cutter Locations

	Absolute Coordinates			Incremental Coordinates*		
Position	**X**	**Y**	**Z**	**I**	**J**	**K**
P0	2.0000	2.0000	8.0000			
P1	3.8750	3.6982	0.0000			
P2	3.8750	9.1250	0.0000			
P3	5.6250	9.1250	0.0000			
P4	5.6250	9.0000	0.0000			
P5	6.5000	8.1250	0.0000	0.8750	0.0000	
P6	7.3750	9.0000	0.0000	0.0000	0.8750	
P7	7.3750	9.1250	0.0000			
P8	9.3018	9.1250	0.0000			

***** *Circular interpolation coordinates are incremental from initial cutter position.*

NC Program Listing

N010	G90	F6.0	S4584	M03				*Absolute positioning mode, start up*
N020	G00	X3.8750	Y3.6982	Z0.0000				*Go rapid to P1*
N030	G01	X3.8750	Y9.1250	Z0.0000				*Go linear to P2*
N040	G01	X5.6250	Y9.1250	Z0.0000				*Go linear to P3*
N050	G01	X5.6250	Y9.0000	Z0.0000				*Go linear to P4*
N060	G03	X6.5000	Y8.1250	Z0.0000	I0.8750	J0.0000		*Go CCW to P5 – qtr. circle interp.*
N070	G03	X7.3750	Y9.0000	Z0.0000	I0.0000	J0.8750		*Go CCW to P6 – qtr. circle interp.*
N080	G01	X7.3750	Y9.1250	Z0.0000				*Go linear to P7*
N090	G01	X9.3018	Y9.1250	Z0.0000				*Go linear to P8*
N100	G01	X3.8750	Y3.6982	Z0.0000				*Go linear to P1*
N110	G00	X2.0000	Y2.0000	Z8.0000	M05	M02	M30	*Go rapid to P0, stop spindle, rewind*